WDH 11W7 W IRE

12NC: 859991719230

GTIN (EAN) code: 8003437064586

Whirlpool
SENSING THE DIFFERENCE

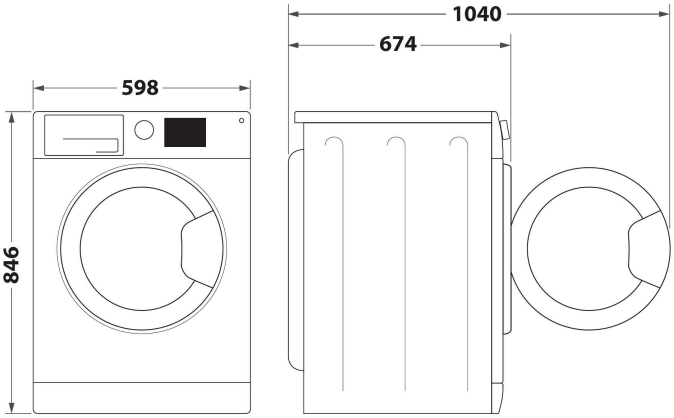

- Energy class A++
- Drying capacity: 11,0 kg
- White finishing
- 6TH Sense Technology
- 6thSense Live
- Heat pump technology
- Start delay 1-24h
- SteamCare
- Delicates
- Adjustable dryness levels
- Eco Cotton
- Wool
- Steam Refresh
- Mixed Fabrics Program
- Special big items
- Jeans
- Sport

Whirlpool heat pump tumble dryer: freestanding, 11,0kg - WDH 11W7 W IRE

This Whirlpool freestanding Tumble Dryer features: essential 11,0kg capacity drum. Exclusive 6th SENSE technology that constantly monitors the moisture in the drum, protecting your clothes and providing ideal drying results. Connectivity that allows the appliance to receive information regarding the wash cycle used by your washing machine, and adjusts settings accordingly, for ideal results. Elegant screened door design. Steam drying, for delicate, hygienic drying action that reduces wrinkles and freshens your items.

Precision Dry
Whirlpool's Precision Dry technology, powered by 6th Sense, automatically adjusts the cycle by detecting humidity and temperature levels to prevent over-drying.

Iron Touch
Whirlpool's Iron Touch technology removes the need for ironing by infusing water to generate optimal steam at the perfect moment to deliver ready-to-wear clothes.

Adaptive Dry
Whirlpool's AdaptiveDry technology customizes drying by using HomeWhiz feedback on dryness, creases, and cycle duration. Advanced AI algorithms then adjust future programs to match your preferences, ensuring results perfectly aligned with your expectations.

Silent Spin
Whirlpool's SilentSpin dryer ensures a quieter and peaceful home with advanced drum coating that reduces noise from zips and buttons.

Energy Class A++
Highly energy efficient With its A++ energy rating, this Whirlpool Dryer will allow you to enjoy both ideal results and very low energy consumption.

Premium design
This Whirlpool Dryer's outstanding design features ensure it will become an eye-catching addition to your home.

Drum light option
In-drum light. Our dryers are equipped with an inside light that automatically turns on when the door is opened, for improved visibility.

Inverter Motor
Designed to ensure energy efficiency and quieter operation, the inverter motor minimizes wear and friction thanks to its brushless design. By adjusting to optimal speeds, it maximizes energy efficiency and reduces waste.

WDH 11W7 W IRE

12NC: 859991719230

GTIN (EAN) code: 8003437064586

Whirlpool
SENSING THE DIFFERENCE

MAIN FEATURES

Product group	Dryer
Commercial code	WDH 11W7 W IRE
GTIN (EAN) code	8003437064586
Construction type	Free-standing
Installation type	Free-standing
Removable work top	N/A
Loading type	Front loader
Main colour of product	White
Electrical connection rating (W)	800
Current (A)	10
Voltage (V)	230-240
Frequency (Hz)	50
Length of Electrical Supply Cord (cm)	150
Plug type	UK
Height of the product	846
Width of the product	598
Depth of the product	674
Depth with open door 90 degree (mm)	1040
Net weight (kg)	44.5

TECHNICAL FEATURES

Automatic programmes	Yes
Moisture monitoring system	Yes
Adjustable drying temperature	No
Progress indicator	Yes
Digital countdown indicator	Yes
Start delay options	Continuous
Start delay time max. (h)	24
Blocked filter indicator	Yes
Full tank indicator	Yes
Quick dry	No
Anti-crease function	Yes
Drum volume (l)	127

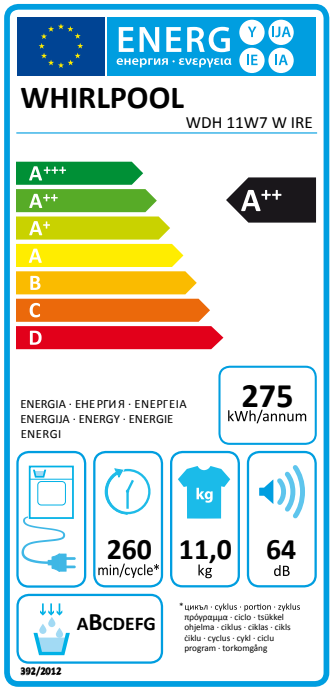

PERFORMANCES

Energy efficiency class - NEW (2010/30/EU)	A++
Condensation efficiency class - NEW (2010/30/EU)	B
Energy consumption electric dryer, full load - NEW (2010/30/EU)	2,42
Weighted condensation efficiency	88
Weighted annual energy consumption, electric dryer - NEW (2010/30/EU)	275
Capacity cotton (kg) - NEW (2010/30/EU)	11,0
Dryer type	Condenser
Noise level (dB(A) re 1 pW)	64
Standard cotton programme time at full load	260
Standard cotton programme time at partial load	140
Weighted programme time	191
Power consumption in left-on mode - NEW (2010/30/EU)	1,00
Duration of the left-on mode - NEW (2010/30/EU)	30
Power consumption in off-mode - NEW (2010/30/EU)	0,43